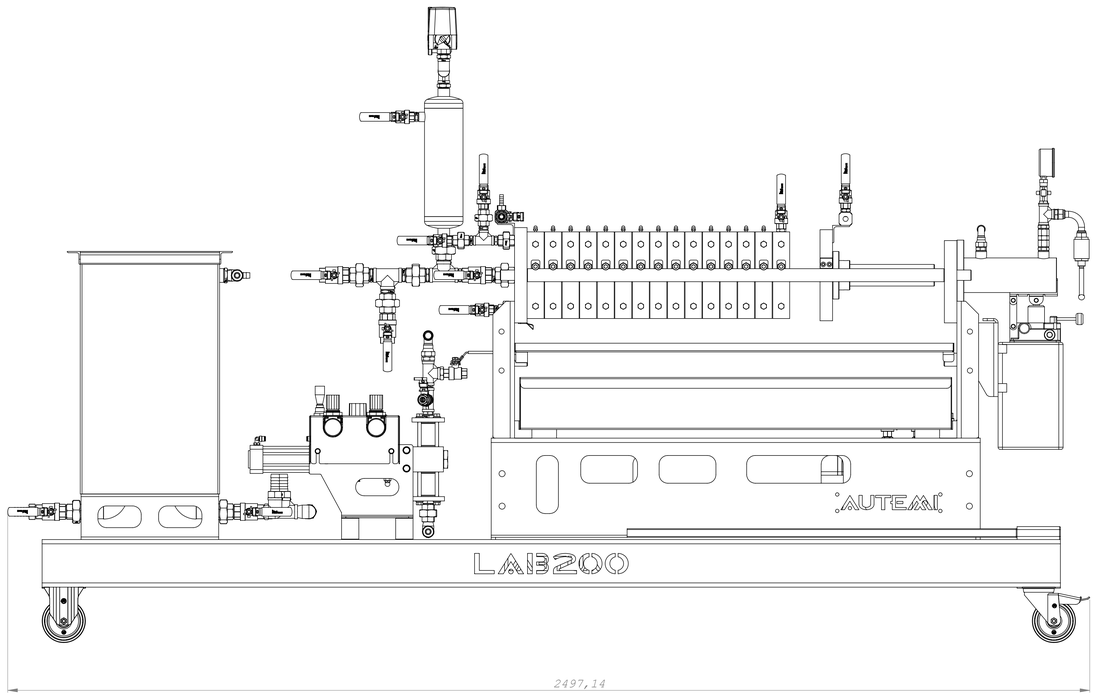

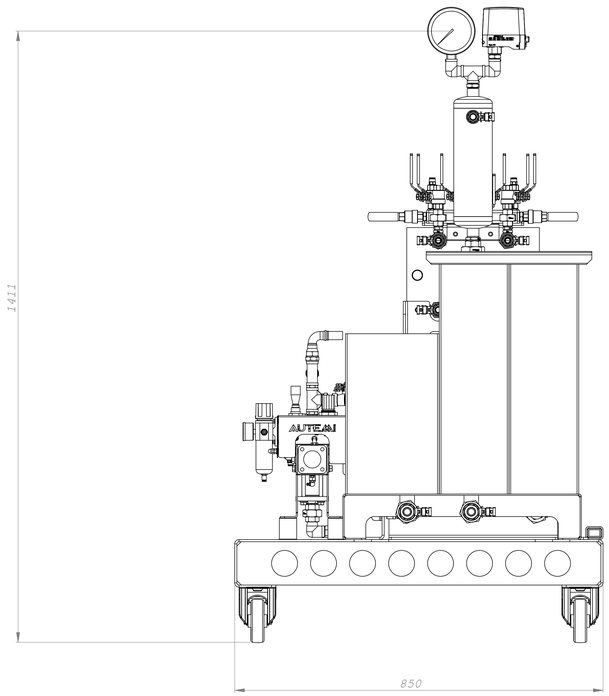

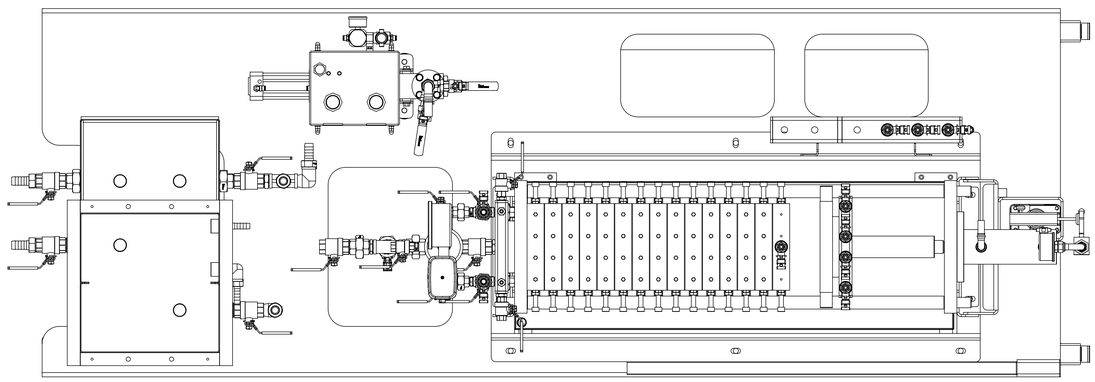

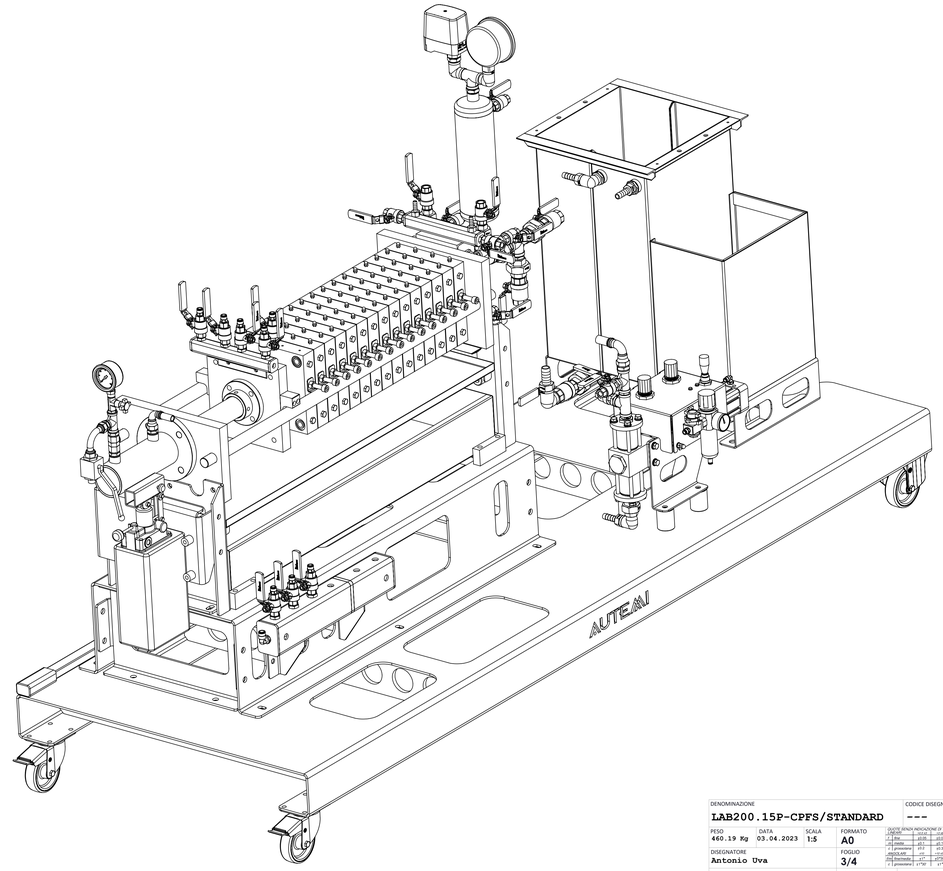

DENOMINAZIONE **LAB200.15P-CPFS/STANDARD**			CODICE DISEGNO ---
PESO 460.19 Kg	DATA 03.04.2023	SCALA 1:5	FORMATO A0
DISEGNATORE Antonio Uva			FOGLIO 3/4

AUTEMI
AUTOMATION & MECHANICAL DESIGN
Via G. Di Vittorio, 2 - 20871 - Vimercate (MB) - Italy
C.F. 97541350154 - P.IVA: 09541350154 - Cell. +39 (0)39 6080 - Fax +39 (0)39 6080 - info@autemi.com - www.autemi.com

SPIGOLI NON QUOTATI
RAGGI
SMUSSI

NOTE

QUOTE SENZA TOLLERANZA SECONDO DI TOLLERANZA ISO 2768 m									
Campo di tolleranza	0.5 ÷ 3	3 ÷ 6	6 ÷ 30	30 ÷ 120	120 ÷ 400	400 ÷ 1000	1000 ÷ 2000	2000 ÷ 4000	
m (fine)	±0.05	±0.05	±0.1	±0.15	±0.2	±0.3	±0.5	±0.8	±1
m (media)	±0.1	±0.1	±0.2	±0.3	±0.5	±0.8	±1.2	±2	±3
m (grossolana)	±0.2	±0.3	±0.5	±0.8	±1.2	±2	±3	±4	±5
ANGOLI ±30'	±1°	±1°30'	±1°15'	±1°0'	±0°45'	±0°30'	±0°15'	±0°10'	±0°5'
Raggi smussi	±1	±1°30'	±1°15'	±1°0'	±0°45'	±0°30'	TOL1 - INCISIVI + RACCORDI		
r (arrotondam.)	±1°30'	±1°	±0°30'	±0°15'	±0°10'	±0°5'	±0°10'	±0°15'	

Proprietà riservata Riproduzione vietata (L.n.2575 5/feb) i concpri dell'ill. o nomo di legge
All rights reserved Drawing cannot be reproduced in any way.
Refuse to do so will entitle Autemi s.r.l. to take legal action.